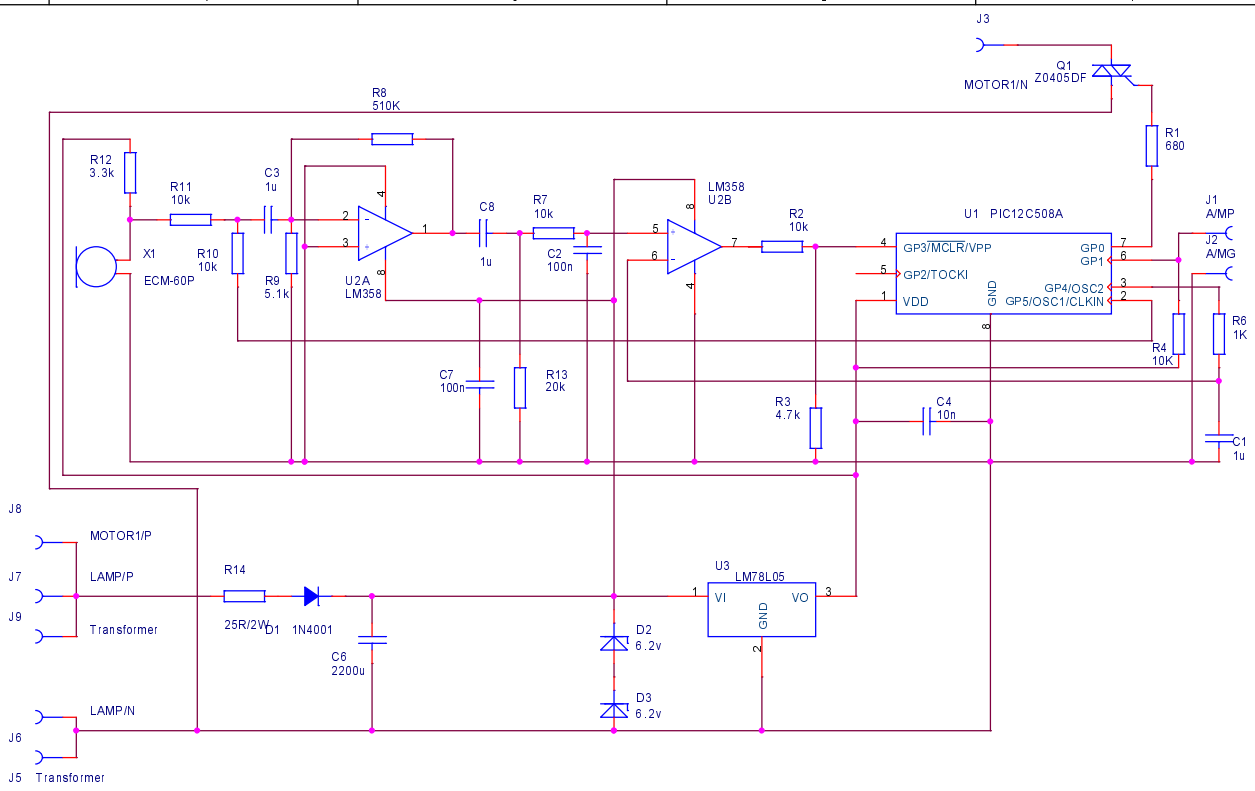

Title	Mania EF1	
Size	Document Number 62000096	Rev 1
Date: Thursday, May 08, 2003	Sheet 1 of 1	